Mini Bio Luxury - схема подключения 2
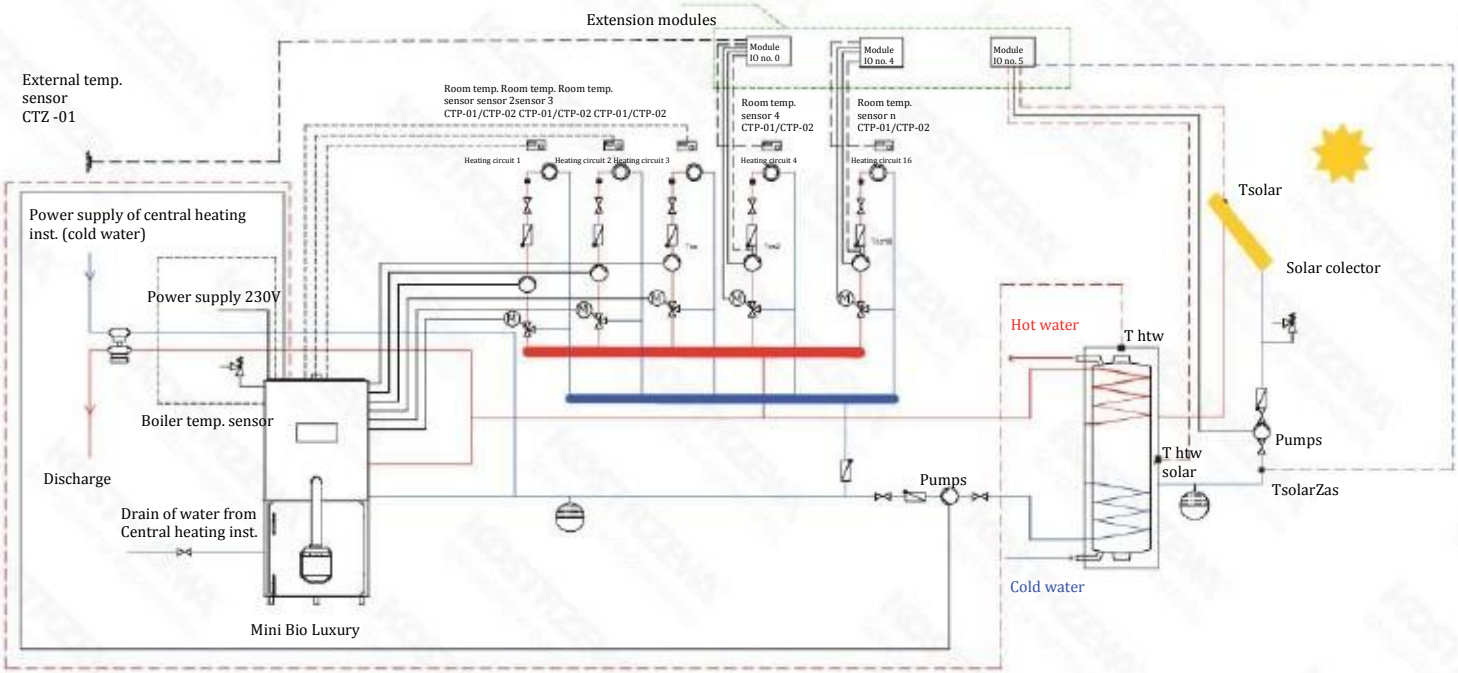
ATTENTION! To realize all functions additional modules must be purchased.