Mini Bio Luxury - схема подключения 1
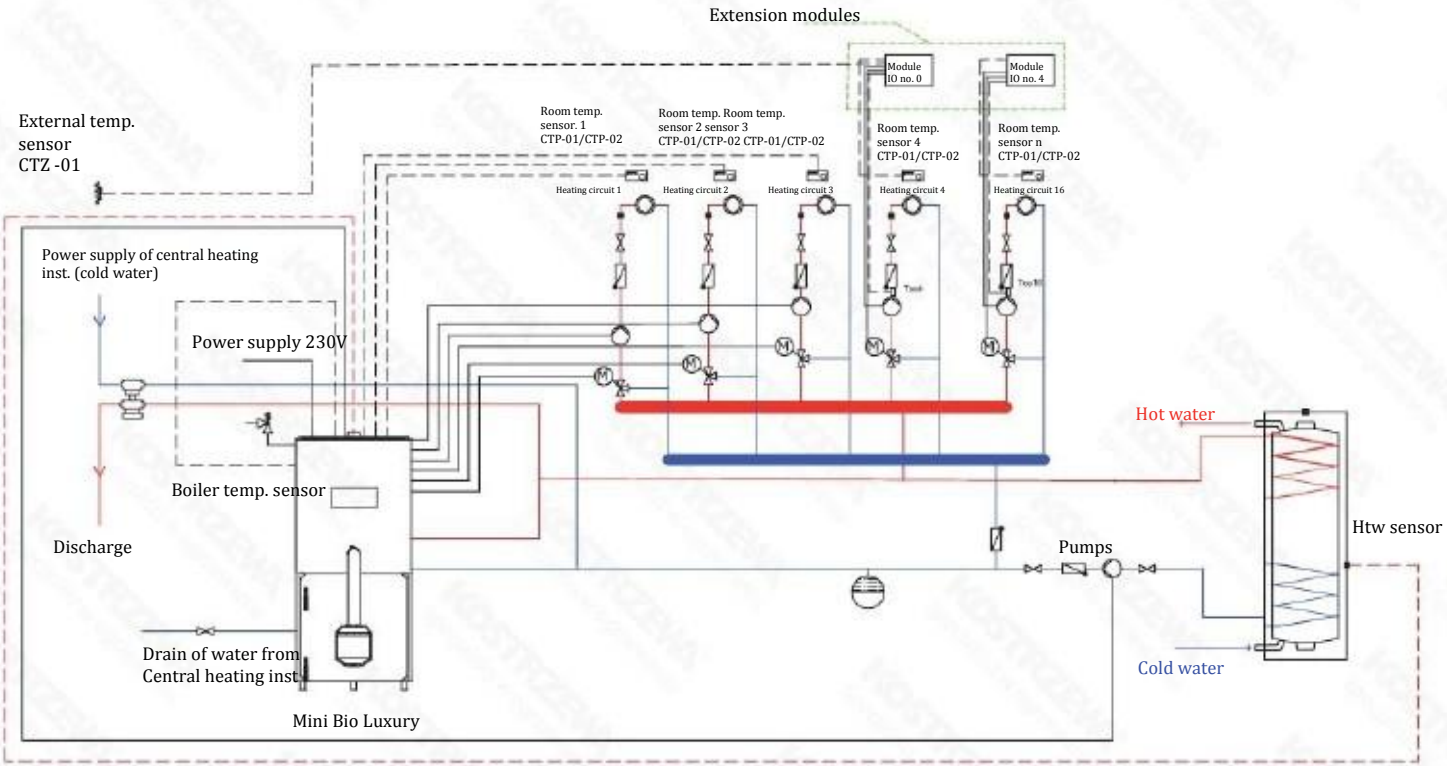
ATTENTION! To realize all functions additional modules must be purchased.